# OUTLET Ø250MM FOR FAN 84330

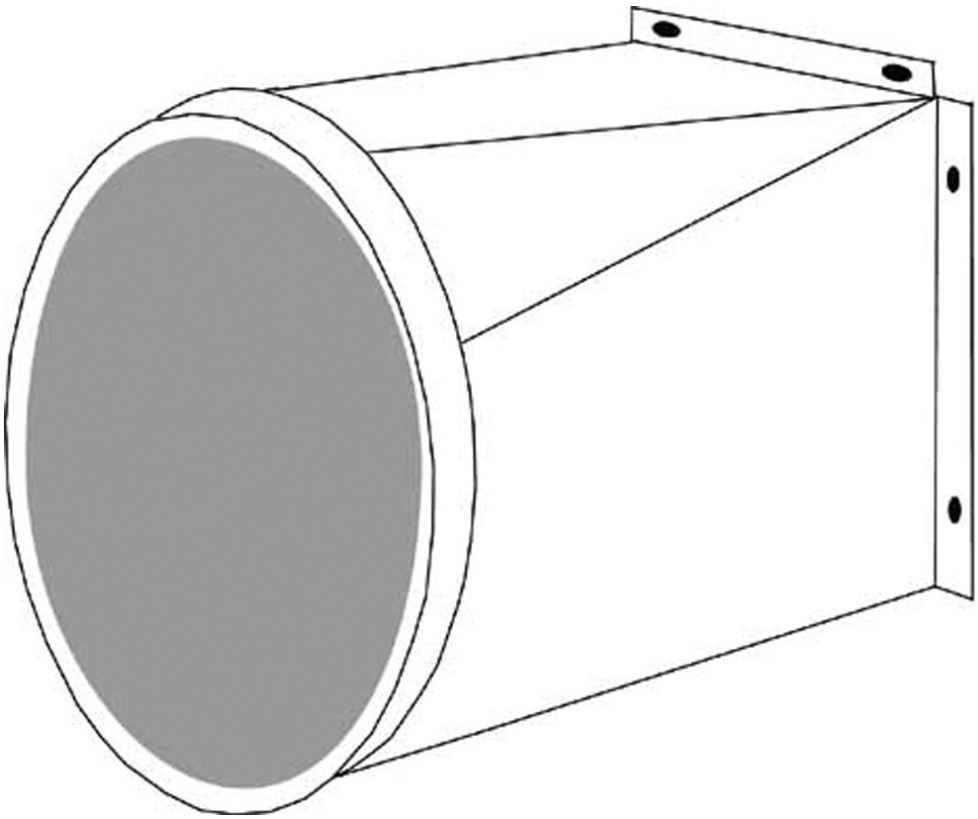

Part No
**88401**

**Alentec & Orion AB** Grustagsvägen 4, SE-13840, Älta, SWEDEN · info@alentec.se · www.alentec.com

## OUTLET Ø250MM FOR FAN 84330

| TECHNICAL DATA | |
|---|---|
| Part No | 88401 |
| H.S. Code | 84799070 |