FAN OUTLET Ø250 MM

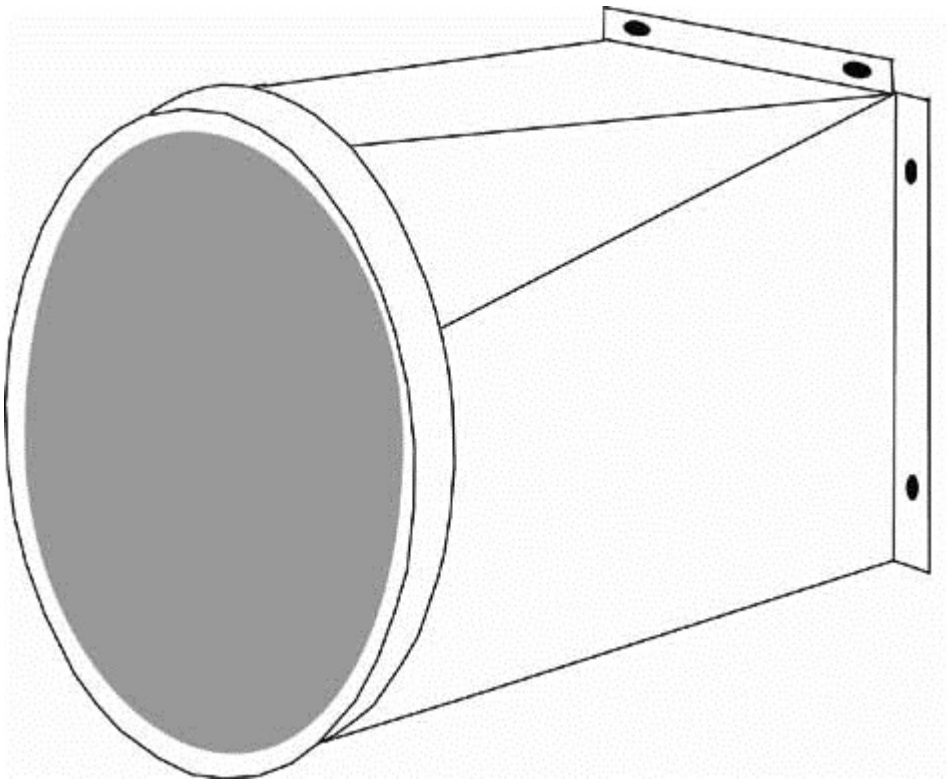

Part No
84571

FAN OUTLET Ø250 MM

from rectangular to round Ø250 mm for fan 84554.

TECHNICAL DATA	
Part No	84571
H.S. Code	84799070